설비 자동화 사양 3-2
EqToEq Comm Media
CC-Link IE Control (Melsecnet/G)
for MOD Factory Automation

Prepared	Checked	Checked	Approved
2016/12/23 이현식			

Samsung Display Co.,Ltd
(C)Copyright. All Right Reserve

・허가 없이 본 사양서의 내용에 대해서는 일부 혹은 전부를 무단으로 복제할 수 없음.
・본 사양서의 내용은, 사전에 예고 없이 변경 될수 있습니다.

삼성디스플레이주식회사

SAMSUNG CONFIDENTIAL

송지훈/jhsmd.song/Module자동화그룹(아산/천안단지)/1071158069/20161226154317

053801482741791

Revision History

Rev.	Date	Description	Page
V1.00	2013.07.05	In-Line 기준 PIO / Data Tracking	
V1.02	2016.09.06	W_HS MATERIALID 추가	
V1.03	2016.12.23	W_HS UNIQUEID 추가	

송지훈/jhsmd.song/Module자동화그룹(아산/천안단지)/1071158069/20161226154317
053801482741791

Table of Contents

1. Communication PROTOCOL

2. Network Status

3. Bit & Word Data Address

송지훈/jhsmd.song/Module자동화그룹(아산/천안단지)/1071158069/20161226154317
053801482741791

1. Communication PROTOCOL

The basic communication unit between Equipments is CC-Link IE (Melsecnet/G).

1.1 Communication Structure and Concept

1) Communication Structure

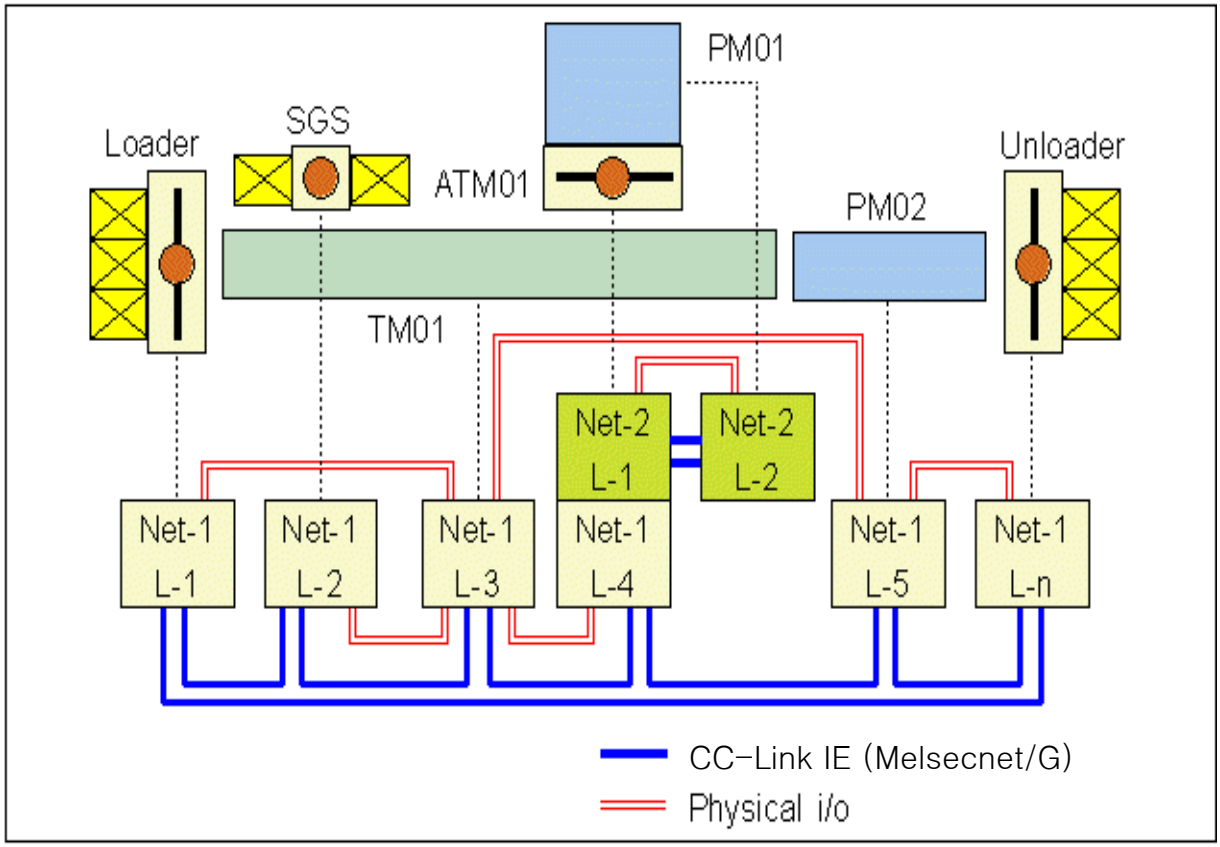

2) Field Bus Constitution

(1) Protocol : CC-Link IE (Melsecnet/G) S-Type

(2) Media : Optical Fiber Cable (**Multi-mode fiber**)

* It can be used in different Field Bus in each Area or Complex Equipment.

3) Physical I/O

△ Physical I/O is used. For the purpose of Equipment state and Network state's trust and stability.

△ Tags attached to Connector between Equipment.

△ If it is not assigned, Upper Maker have to Connect the Cable.

△ Connection must connect between Equipment and Equipment.

※ Though there are many glass transfer path in Equipment to Equipment, Connection is only one.

송지훈/jhsmd.song/Module자동화그룹(아산/천안단지)/1071158069/20161226154317
053801482741791

1.2 PLC (Provide in each Local by Equipment Maker)

PLC Hard Ware Configuration.

1) CPU : MelsecQ Series [QnU]
2) CC-Link IE (Melsecnet/G) Unit : CC-Link IE (Melsecnet/G) S-Type Convertible
3) Input Unit : DC 24V(12V) Type (ex: Melsec QX40)
4) Output Unit : Dry Contact Type (ex: Melsec QY10)
5) Optical Cable : 1000BASE-SX(MMF, Multi Mode Fiber, CC-LINK Convertible), 1 Set/Network
6) Optical Connector : Duplex LC Connector(CC-Link Convertible), 2 Set/Network

7) Wire Cable : 0.35 Square, 30P, 1 Set/Network
8) Wire Connector : MS3102A-24-28S, MS3106A-24-28P
9) Name Tag : It will be attached to Cable's both ends.
   △ OPTICAL Cable : [EQPID] Net#?? L#??(OUT/IN) → L#??(IN/OUT)
   △ WIRE Cable : [EQPID] Net#?? L#??(Upper/Lower) → L#??(Lower/Upper)
9) Cable(Optical, Wire) Pulling
   △ If it will not be decided, follow the Local order.
   △ Cable(Optical, Wire) Length must be discussed with SDC engineers
   ■ The Equipment Maker which is assigned to Local #1 must prepare the additional Spare Parts [(4) ~ (8)].
10) Power Consent
   △ AC220V 2P, 3S, GND, KS(Korean Industrial Standard) product

송지훈/jhsmd.song/Module자동화그룹(아산/천안단지)/1071158069/20161226154317
053801482741791

1.3 Data Link Configuration

Link Type	CC-Link IE (Melsec Net/G)	Remarks
UNIT	CC-Link IE (Melsec Net-G) Convertible	**S Type**
BPS	1Gbps	**Mode:4**
Cable	**1000BASE-SX(MMF, Melsec Net/G Convertible)**	
Transmission Type	Doubleness Loop Type	
Use Network Unit	Max, 4Unit / 1CPU	

송지훈/jhsmd.song/Module자동화그룹(아산/천안단지)/1071158069/20161226154317
053801482741791

1.4 Data Handling Rule

1) Data Keeping Time *** Very important**

△ There are no Data Clear Action about all Items. Make it a rule to do Over Write.

2) Character Data

△ all of the ASCii Data : **align left**

△ in case of ASCii Data fill the empty value with **Space(H20) value.**

△ Order of inter character in word : Low byte → High byte order

'A'	'B'	'C'	'D'	'1'	'2'	'3'	'4'				
42	41	44	43	32	31	34	33	20	20	20	20
n(W)		n+1(W)		n+2(W)		n+3(W)		n+4(W)		n+5(W)	

1 Character data : (ex) 'R' → H2052 (H5220 is an error)

1 Character data : (ex) '2' → H2032 (H3220 is an error)

2 Character data : (ex) 'I1' → H3149 (H4931, H3169 are errors)

3 Character data : (ex) '123' → H3231 2033 (H3231 0033 is an error)

■ Left Align (include numerical character)

3) Data Communication Method.

△ **Link Memory**

송지훈/jhsmd.song/Module자동화그룹(아산/천안단지)/1071158069/20161226154317
053801482741791

2. Network Status

1) Usage of Link Special Relay(SB) & Link Special Register(SW)

Relay	Register	Description	Usage
SB0020	SW0020	Network Module Status	Own Station
SB0047	SW0047	Baton Pass Status	Own Station
SB0049	SW0049	Host Data link status	Own Station
SB00A0	SW00A0	Baton Pass Status of each station	Opponent Station
SB00B0	SW00W0	Cyclic transmission status of each station	Opponent Station
SB0100	SW0100	CPU operation status of each station Opponent Station(1)	Opponent Station
SB0110	SW0110	CPU operation status of each station Opponent Station(2)	Opponent Station
SB00F0	SW00F0	CPU RUN status of each station	Opponent Station

송지훈/jhsmd.song/Module자동화그룹(아산/천안단지)/1071158069/20161226154317
053801482741791

3. Bit & Word Data Address

Local	Section	Item	Address Start		Address End		Length	Comment	Remarks
L1	to Upper Eqp	tU1	LB	0000	LB	007F	128	to Upper Eqp #01	
		tU2	LB	0080	LB	00FF	128	to Upper Eqp #02	
		tU3	LB	0100	LB	017F	128	to Upper Eqp #03	
		tU4	LB	0180	LB	01FF	128	to Upper Eqp #04	
		tU5	LB	0200	LB	027F	128	to Upper Eqp #05	
	to Lower Eqp	tL1	LB	0280	LB	02FF	128	to Lower Eqp #01	
		tL2	LB	0300	LB	037F	128	to Lower Eqp #02	
		tL3	LB	0380	LB	03FF	128	to Lower Eqp #03	
		tL4	LB	0400	LB	047F	128	to Lower Eqp #04	
		tL5	LB	0480	LB	04FF	128	to Lower Eqp #05	
L1	**TOTAL**		**LB**	**0000**	**LB**	**04FF**	**1,280**	**L1 TOTAL**	
L2	to Upper Eqp	tU1	LB	0500	LB	057F	128	to Upper Eqp #01	
		tU2	LB	0580	LB	05FF	128	to Upper Eqp #02	
		tU3	LB	0600	LB	067F	128	to Upper Eqp #03	
		tU4	LB	0680	LB	06FF	128	to Upper Eqp #04	
		tU5	LB	0700	LB	077F	128	to Upper Eqp #05	
	to Lower Eqp	tL1	LB	0780	LB	07FF	128	to Lower Eqp #01	
		tL2	LB	0800	LB	087F	128	to Lower Eqp #02	
		tL3	LB	0880	LB	08FF	128	to Lower Eqp #03	
		tL4	LB	0900	LB	097F	128	to Lower Eqp #04	
		tL5	LB	0980	LB	09FF	128	to Lower Eqp #05	
L2	**TOTAL**		**LB**	**0500**	**LB**	**09FF**	**1,280**	**L2 TOTAL**	
L3	to Upper Eqp	tU1	LB	0A00	LB	0A7F	128	to Upper Eqp #01	
		tU2	LB	0A80	LB	0AFF	128	to Upper Eqp #02	
		tU3	LB	0B00	LB	0B7F	128	to Upper Eqp #03	
		tU4	LB	0B80	LB	0BFF	128	to Upper Eqp #04	
		tU5	LB	0C00	LB	0C7F	128	to Upper Eqp #05	
	to Lower Eqp	tL1	LB	0C80	LB	0CFF	128	to Lower Eqp #01	
		tL2	LB	0D00	LB	0D7F	128	to Lower Eqp #02	
		tL3	LB	0D80	LB	0DFF	128	to Lower Eqp #03	
		tL4	LB	0E00	LB	0E7F	128	to Lower Eqp #04	
		tL5	LB	0E80	LB	0EFF	128	to Lower Eqp #05	
L3	**TOTAL**		**LB**	**0A00**	**LB**	**0EFF**	**1,280**	**L3 TOTAL**	
L4	to Upper Eqp	tU1	LB	0F00	LB	0F7F	128	to Upper Eqp #01	
		tU2	LB	0F80	LB	0FFF	128	to Upper Eqp #02	
		tU3	LB	1000	LB	107F	128	to Upper Eqp #03	
		tU4	LB	1080	LB	10FF	128	to Upper Eqp #04	
		tU5	LB	1100	LB	117F	128	to Upper Eqp #05	
	to Lower	tL1	LB	1180	LB	11FF	128	to Lower Eqp #01	
		tL2	LB	1200	LB	127F	128	to Lower Eqp #02	
		tL3	LB	1280	LB	12FF	128	to Lower Eqp #03	

송지훈/jhsmd.song/Module자동화그룹(아산/천안단지)/1071158069/20161226154317
053801482741791

Local	Section	Item	Address					Comment	Remarks
			Start		End		Length		
	Eqp	tL4	LB	1300	LB	137F	128	to Lower Eqp #04	
		tL5	LB	1380	LB	13FF	128	to Lower Eqp #05	
L4	**TOTAL**		**LB**	**0F00**	**LB**	**13FF**	**1,280**	**L4 TOTAL**	
L5	to Upper Eqp	tU1	LB	1400	LB	147F	128	to Upper Eqp #01	
		tU2	LB	1480	LB	14FF	128	to Upper Eqp #02	
		tU3	LB	1500	LB	157F	128	to Upper Eqp #03	
		tU4	LB	1580	LB	15FF	128	to Upper Eqp #04	
		tU5	LB	1600	LB	167F	128	to Upper Eqp #05	
	to Lower Eqp	tL1	LB	1680	LB	16FF	128	to Lower Eqp #01	
		tL2	LB	1700	LB	177F	128	to Lower Eqp #02	
		tL3	LB	1780	LB	17FF	128	to Lower Eqp #03	
		tL4	LB	1800	LB	187F	128	to Lower Eqp #04	
		tL5	LB	1880	LB	18FF	128	to Lower Eqp #05	
L5	**TOTAL**		**LB**	**1400**	**LB**	**18FF**	**1,280**	**L5 TOTAL**	
L6	to Upper Eqp	tU1	LB	1900	LB	197F	128	to Upper Eqp #01	
		tU2	LB	1980	LB	19FF	128	to Upper Eqp #02	
		tU3	LB	1A00	LB	1A7F	128	to Upper Eqp #03	
		tU4	LB	1A80	LB	1AFF	128	to Upper Eqp #04	
		tU5	LB	1B00	LB	1B7F	128	to Upper Eqp #05	
	to Lower Eqp	tL1	LB	1B80	LB	1BFF	128	to Lower Eqp #01	
		tL2	LB	1C00	LB	1C7F	128	to Lower Eqp #02	
		tL3	LB	1C80	LB	1CFF	128	to Lower Eqp #03	
		tL4	LB	1D00	LB	1D7F	128	to Lower Eqp #04	
		tL5	LB	1D80	LB	1DFF	128	to Lower Eqp #05	
L6	**TOTAL**		**LB**	**1900**	**LB**	**1DFF**	**1,280**	**L6 TOTAL**	
L7	to Upper Eqp	tU1	LB	1E00	LB	1E7F	128	to Upper Eqp #01	
		tU2	LB	1E80	LB	1EFF	128	to Upper Eqp #02	
		tU3	LB	1F00	LB	1F7F	128	to Upper Eqp #03	
		tU4	LB	1F80	LB	1FFF	128	to Upper Eqp #04	
		tU5	LB	2000	LB	207F	128	to Upper Eqp #05	
	to Lower Eqp	tL1	LB	2080	LB	20FF	128	to Lower Eqp #01	
		tL2	LB	2100	LB	217F	128	to Lower Eqp #02	
		tL3	LB	2180	LB	21FF	128	to Lower Eqp #03	
		tL4	LB	2200	LB	227F	128	to Lower Eqp #04	
		tL5	LB	2280	LB	22FF	128	to Lower Eqp #05	
L7	**TOTAL**		**LB**	**1E00**	**LB**	**22FF**	**1,280**	**L7 TOTAL**	
L8	to Upper Eqp	tU1	LB	2300	LB	237F	128	to Upper Eqp #01	
		tU2	LB	2380	LB	23FF	128	to Upper Eqp #02	
		tU3	LB	2400	LB	247F	128	to Upper Eqp #03	
		tU4	LB	2480	LB	24FF	128	to Upper Eqp #04	
		tU5	LB	2500	LB	257F	128	to Upper Eqp #05	
	to	tL1	LB	2580	LB	25FF	128	to Lower Eqp #01	
		tL2	LB	2600	LB	267F	128	to Lower Eqp #02	

송지훈/jhsmd.song/Module자동화그룹(아산/천안단지)/1071158069/20161226154317
053801482741791

Local	Section	Item	Address					Comment	Remarks
			Start		End		Length		
	Lower Eqp	tL3	LB	2680	LB	26FF	128	to Lower Eqp #03	
		tL4	LB	2700	LB	277F	128	to Lower Eqp #04	
		tL5	LB	2780	LB	27FF	128	to Lower Eqp #05	
L8	**TOTAL**		**LB**	**2300**	**LB**	**27FF**	**1,280**	**L8 TOTAL**	
L9	to Upper Eqp	tU1	LB	2800	LB	287F	128	to Upper Eqp #01	
		tU2	LB	2880	LB	28FF	128	to Upper Eqp #02	
		tU3	LB	2900	LB	297F	128	to Upper Eqp #03	
		tU4	LB	2980	LB	29FF	128	to Upper Eqp #04	
		tU5	LB	2A00	LB	2A7F	128	to Upper Eqp #05	
	to Lower Eqp	tL1	LB	2A80	LB	2AFF	128	to Lower Eqp #01	
		tL2	LB	2B00	LB	2B7F	128	to Lower Eqp #02	
		tL3	LB	2B80	LB	2BFF	128	to Lower Eqp #03	
		tL4	LB	2C00	LB	2C7F	128	to Lower Eqp #04	
		tL5	LB	2C80	LB	2CFF	128	to Lower Eqp #05	
L9	**TOTAL**		**LB**	**2800**	**LB**	**2CFF**	**1,280**	**L9 TOTAL**	
L10	to Upper Eqp	tU1	LB	2D00	LB	2D7F	128	to Upper Eqp #01	
		tU2	LB	2D80	LB	2DFF	128	to Upper Eqp #02	
		tU3	LB	2E00	LB	2E7F	128	to Upper Eqp #03	
		tU4	LB	2E80	LB	2EFF	128	to Upper Eqp #04	
		tU5	LB	2F00	LB	2F7F	128	to Upper Eqp #05	
	to Lower Eqp	tL1	LB	2F80	LB	2FFF	128	to Lower Eqp #01	
		tL2	LB	3000	LB	307F	128	to Lower Eqp #02	
		tL3	LB	3080	LB	30FF	128	to Lower Eqp #03	
		tL4	LB	3100	LB	317F	128	to Lower Eqp #04	
		tL5	LB	3180	LB	31FF	128	to Lower Eqp #05	
L10	**TOTAL**		**LB**	**2D00**	**LB**	**31FF**	**1,280**	**L10 TOTAL**	
L11	to Upper Eqp	tU1	LB	3200	LB	327F	128	to Upper Eqp #01	
		tU2	LB	3280	LB	32FF	128	to Upper Eqp #02	
		tU3	LB	3300	LB	337F	128	to Upper Eqp #03	
		tU4	LB	3380	LB	33FF	128	to Upper Eqp #04	
		tU5	LB	3400	LB	347F	128	to Upper Eqp #05	
	to Lower Eqp	tL1	LB	3480	LB	34FF	128	to Lower Eqp #01	
		tL2	LB	3500	LB	357F	128	to Lower Eqp #02	
		tL3	LB	3580	LB	35FF	128	to Lower Eqp #03	
		tL4	LB	3600	LB	367F	128	to Lower Eqp #04	
		tL5	LB	3680	LB	36FF	128	to Lower Eqp #05	
L11	**TOTAL**		**LB**	**3200**	**LB**	**36FF**	**1,280**	**L11 TOTAL**	
L12	to Upper Eqp	tU1	LB	3700	LB	377F	128	to Upper Eqp #01	
		tU2	LB	3780	LB	37FF	128	to Upper Eqp #02	
		tU3	LB	3800	LB	387F	128	to Upper Eqp #03	
		tU4	LB	3880	LB	38FF	128	to Upper Eqp #04	
		tU5	LB	3900	LB	397F	128	to Upper Eqp #05	
		tL1	LB	3980	LB	39FF	128	to Lower Eqp #01	

송지훈/jhsmd.song/Module자동화그룹(아산/천안단지)/1071158069/20161226154317
053801482741791

Local	Section	Item	Address					Comment	Remarks
			Start		End		Length		
	to Lower Eqp	tL2	LB	3A00	LB	3A7F	128	to Lower Eqp #02	
		tL3	LB	3A80	LB	3AFF	128	to Lower Eqp #03	
		tL4	LB	3B00	LB	3B7F	128	to Lower Eqp #04	
		tL5	LB	3B80	LB	3BFF	128	to Lower Eqp #05	
L12	**TOTAL**		**LB**	**3700**	**LB**	**3BFF**	**1,280**	**L12 TOTAL**	
L13	to Upper Eqp	tU1	LB	3C00	LB	3C7F	128	to Upper Eqp #01	
		tU2	LB	3C80	LB	3CFF	128	to Upper Eqp #02	
		tU3	LB	3D00	LB	3D7F	128	to Upper Eqp #03	
		tU4	LB	3D80	LB	3DFF	128	to Upper Eqp #04	
		tU5	LB	3E00	LB	3E7F	128	to Upper Eqp #05	
	to Lower Eqp	tL1	LB	3E80	LB	3EFF	128	to Lower Eqp #01	
		tL2	LB	3F00	LB	3F7F	128	to Lower Eqp #02	
		tL3	LB	3F80	LB	3FFF	128	to Lower Eqp #03	
		tL4	LB	4000	LB	407F	128	to Lower Eqp #04	
		tL5	LB	4080	LB	40FF	128	to Lower Eqp #05	
L13	**TOTAL**		**LB**	**3C00**	**LB**	**40FF**	**1,280**	**L13 TOTAL**	
L14	to Upper Eqp	tU1	LB	4100	LB	417F	128	to Upper Eqp #01	
		tU2	LB	4180	LB	41FF	128	to Upper Eqp #02	
		tU3	LB	4200	LB	427F	128	to Upper Eqp #03	
		tU4	LB	4280	LB	42FF	128	to Upper Eqp #04	
		tU5	LB	4300	LB	437F	128	to Upper Eqp #05	
	to Lower Eqp	tL1	LB	4380	LB	43FF	128	to Lower Eqp #01	
		tL2	LB	4400	LB	447F	128	to Lower Eqp #02	
		tL3	LB	4480	LB	44FF	128	to Lower Eqp #03	
		tL4	LB	4500	LB	457F	128	to Lower Eqp #04	
		tL5	LB	4580	LB	45FF	128	to Lower Eqp #05	
L14	**TOTAL**		**LB**	**4100**	**LB**	**45FF**	**1,280**	**L14 TOTAL**	
L15	to Upper Eqp	tU1	LB	4600	LB	467F	128	to Upper Eqp #01	
		tU2	LB	4680	LB	46FF	128	to Upper Eqp #02	
		tU3	LB	4700	LB	477F	128	to Upper Eqp #03	
		tU4	LB	4780	LB	47FF	128	to Upper Eqp #04	
		tU5	LB	4800	LB	487F	128	to Upper Eqp #05	
	to Lower Eqp	tL1	LB	4880	LB	48FF	128	to Lower Eqp #01	
		tL2	LB	4900	LB	497F	128	to Lower Eqp #02	
		tL3	LB	4980	LB	49FF	128	to Lower Eqp #03	
		tL4	LB	4A00	LB	4A7F	128	to Lower Eqp #04	
		tL5	LB	4A80	LB	4AFF	128	to Lower Eqp #05	
L15	**TOTAL**		**LB**	**4600**	**LB**	**4AFF**	**1,280**	**L15 TOTAL**	
L16	to Upper Eqp	tU1	LB	4B00	LB	4B7F	128	to Upper Eqp #01	
		tU2	LB	4B80	LB	4BFF	128	to Upper Eqp #02	
		tU3	LB	4C00	LB	4C7F	128	to Upper Eqp #03	
		tU4	LB	4C80	LB	4CFF	128	to Upper Eqp #04	
		tU5	LB	4D00	LB	4D7F	128	to Upper Eqp #05	

송지훈/jhsmd.song/Module자동화그룹(아산/천안단지)/1071158069/20161226154317
053801482741791

Local	Section	Item	Address					Comment	Remarks
			Start		End		Length		
	to Lower Eqp	tL1	LB	4D80	LB	4DFF	128	to Lower Eqp #01	
		tL2	LB	4E00	LB	4E7F	128	to Lower Eqp #02	
		tL3	LB	4E80	LB	4EFF	128	to Lower Eqp #03	
		tL4	LB	4F00	LB	4F7F	128	to Lower Eqp #04	
		tL5	LB	4F80	LB	4FFF	128	to Lower Eqp #05	
L16	**TOTAL**		**LB**	**4B00**	**LB**	**4FFF**	**1,280**	**L16 TOTAL**	
L17	to Upper Eqp	tU1	LB	5000	LB	507F	128	to Upper Eqp #01	
		tU2	LB	5080	LB	50FF	128	to Upper Eqp #02	
		tU3	LB	5100	LB	517F	128	to Upper Eqp #03	
		tU4	LB	5180	LB	51FF	128	to Upper Eqp #04	
		tU5	LB	5200	LB	527F	128	to Upper Eqp #05	
	to Lower Eqp	tL1	LB	5280	LB	52FF	128	to Lower Eqp #01	
		tL2	LB	5300	LB	537F	128	to Lower Eqp #02	
		tL3	LB	5380	LB	53FF	128	to Lower Eqp #03	
		tL4	LB	5400	LB	547F	128	to Lower Eqp #04	
		tL5	LB	5480	LB	54FF	128	to Lower Eqp #05	
L17	**TOTAL**		**LB**	**5000**	**LB**	**54FF**	**1,280**	**L17 TOTAL**	
L18	to Upper Eqp	tU1	LB	5500	LB	557F	128	to Upper Eqp #01	
		tU2	LB	5580	LB	55FF	128	to Upper Eqp #02	
		tU3	LB	5600	LB	567F	128	to Upper Eqp #03	
		tU4	LB	5680	LB	56FF	128	to Upper Eqp #04	
		tU5	LB	5700	LB	577F	128	to Upper Eqp #05	
	to Lower Eqp	tL1	LB	5780	LB	57FF	128	to Lower Eqp #01	
		tL2	LB	5800	LB	587F	128	to Lower Eqp #02	
		tL3	LB	5880	LB	58FF	128	to Lower Eqp #03	
		tL4	LB	5900	LB	597F	128	to Lower Eqp #04	
		tL5	LB	5980	LB	59FF	128	to Lower Eqp #05	
L18	**TOTAL**		**LB**	**5500**	**LB**	**59FF**	**1,280**	**L18 TOTAL**	
L19	to Upper Eqp	tU1	LB	5A00	LB	5A7F	128	to Upper Eqp #01	
		tU2	LB	5A80	LB	5AFF	128	to Upper Eqp #02	
		tU3	LB	5B00	LB	5B7F	128	to Upper Eqp #03	
		tU4	LB	5B80	LB	5BFF	128	to Upper Eqp #04	
		tU5	LB	5C00	LB	5C7F	128	to Upper Eqp #05	
	to Lower Eqp	tL1	LB	5C80	LB	5CFF	128	to Lower Eqp #01	
		tL2	LB	5D00	LB	5D7F	128	to Lower Eqp #02	
		tL3	LB	5D80	LB	5DFF	128	to Lower Eqp #03	
		tL4	LB	5E00	LB	5E7F	128	to Lower Eqp #04	
		tL5	LB	5E80	LB	5EFF	128	to Lower Eqp #05	
L19	**TOTAL**		**LB**	**5A00**	**LB**	**5EFF**	**1,280**	**L19 TOTAL**	
L20	to Upper Eqp	tU1	LB	5F00	LB	5F7F	128	to Upper Eqp #01	
		tU2	LB	5F80	LB	5FFF	128	to Upper Eqp #02	
		tU3	LB	6000	LB	607F	128	to Upper Eqp #03	
		tU4	LB	6080	LB	60FF	128	to Upper Eqp #04	

송지훈/jhsmd.song/Module자동화그룹(아산/천안단지)/1071158069/20161226154317
053801482741791

Local	Section	Item	Address					Comment	Remarks
			Start		End		Length		
		tU5	LB	6100	LB	617F	128	to Upper Eqp #05	
	to Lower Eqp	tL1	LB	6180	LB	61FF	128	to Lower Eqp #01	
		tL2	LB	6200	LB	627F	128	to Lower Eqp #02	
		tL3	LB	6280	LB	62FF	128	to Lower Eqp #03	
		tL4	LB	6300	LB	637F	128	to Lower Eqp #04	
		tL5	LB	6380	LB	63FF	128	to Lower Eqp #05	
L20	**TOTAL**		**LB**	**5F00**	**LB**	**63FF**	**1,280**	**L20 TOTAL**	
SDC	**Reserved**		**LB**	**6400**	**LB**	**7FFF**	**7,168**	**Sec Reserved**	
TOTAL			**LB**	**0000**	**LB**	**7FFF**	**32,768**	**TOTAL**	

송지훈/jhsmd.song/Module자동화그룹(아산/천안단지)/1071158069/20161226154317
053801482741791

Local	SDCtion	Item	Address Start		Address End		Address Lenth	Comment	Remarks
L1	to Upper Eqp	tU1	LW	0000	LW	001B	28	to Upper Eqp #01	
		tU2	LW	001C	LW	0037	28	to Upper Eqp #02	
		tU3	LW	0038	LW	0053	28	to Upper Eqp #03	
		tU4	LW	0054	LW	006F	28	to Upper Eqp #04	
		tU5	LW	0070	LW	008B	28	to Upper Eqp #05	
	to Lower Eqp	tL1	LW	008C	LW	01F3	360	to Lower Eqp #01	
		tL2	LW	01F4	LW	035B	360	to Lower Eqp #02	
		tL3	LW	035C	LW	04C3	360	to Lower Eqp #03	
		tL4	LW	04C4	LW	062B	360	to Lower Eqp #04	
		tL5	LW	062C	LW	0793	360	to Lower Eqp #05	
	Eq State	Own	LW	0794	LW	07CF	60	Preview (Own)	
		Relate	LW	07D0	LW	080B	60	Preview (Related)	
	Panel Summary		LW	080C	LW	08A1	150	Panel Summary (Total)	
	Reserved		LW	08A2	LW	0905	100	Reserved	
L1	**TOTAL**		**LW**	**0000**	**LW**	**0905**	**2,310**	**L1 TOTAL**	
SDC	**Reserved**		**LW**	**0906**	**LW**	**13FF**	**2,810**	**SDC Reserved**	
L2	to Upper Eqp	tU1	LW	1400	LW	141B	28	to Upper Eqp #01	
		tU2	LW	141C	LW	1437	28	to Upper Eqp #02	
		tU3	LW	1438	LW	1453	28	to Upper Eqp #03	
		tU4	LW	1454	LW	146F	28	to Upper Eqp #04	
		tU5	LW	1470	LW	148B	28	to Upper Eqp #05	
	to Lower Eqp	tL1	LW	148C	LW	15F3	360	to Lower Eqp #01	
		tL2	LW	15F4	LW	175B	360	to Lower Eqp #02	
		tL3	LW	175C	LW	18C3	360	to Lower Eqp #03	
		tL4	LW	18C4	LW	1A2B	360	to Lower Eqp #04	
		tL5	LW	1A2C	LW	1B93	360	to Lower Eqp #05	
	Eq State	Own	LW	1B94	LW	1BCF	60	Preview (Own)	
		Relate	LW	1BD0	LW	1C0B	60	Preview (Related)	
	Panel Summary		LW	1C0C	LW	1CA1	150	Panel Summary (Total)	
	Reserved		LW	1CA2	LW	1D05	100	Reserved	
L2	**TOTAL**		**LW**	**1400**	**LW**	**1D05**	**2,310**	**L2 TOTAL**	
SDC	**Reserved**		**LW**	**1D06**	**LW**	**27FF**	**2,810**	**SDC Reserved**	
L3	to Upper Eqp	tU1	LW	2800	LW	281B	28	to Upper Eqp #01	
		tU2	LW	281C	LW	2837	28	to Upper Eqp #02	
		tU3	LW	2838	LW	2853	28	to Upper Eqp #03	
		tU4	LW	2854	LW	286F	28	to Upper Eqp #04	
		tU5	LW	2870	LW	288B	28	to Upper Eqp #05	
	to Lower Eqp	tL1	LW	288C	LW	29F3	360	to Lower Eqp #01	
		tL2	LW	29F4	LW	2B5B	360	to Lower Eqp #02	
		tL3	LW	2B5C	LW	2CC3	360	to Lower Eqp #03	
		tL4	LW	2CC4	LW	2E2B	360	to Lower Eqp #04	
		tL5	LW	2E2C	LW	2F93	360	to Lower Eqp #05	
	Eq State	Own	LW	2F94	LW	2FCF	60	Preview (Own)	
		Relate	LW	2FD0	LW	300B	60	Preview (Related)	
	Panel Summary		LW	300C	LW	30A1	150	Panel Summary (Total)	
	Reserved		LW	30A2	LW	3105	100	Reserved	
L3	**TOTAL**		**LW**	**2800**	**LW**	**3105**	**2,310**	**L3 TOTAL**	
SDC	**Reserved**		**LW**	**3106**	**LW**	**3BFF**	**2,810**	**SDC Reserved**	
L4	to	tU1	LW	3C00	LW	3C1B	28	to Upper Eqp #01	
		tU2	LW	3C1C	LW	3C37	28	to Upper Eqp #02	

송지훈/jhsmd.song/Module자동화그룹(아산/천안단지)/1071158069/20161226154317
053801482741791

Local	SDCtion	Item	Address Start		Address End		Lenth	Comment	Remarks
	Upper Eqp	tU3	LW	3C38	LW	3C53	28	to Upper Eqp #03	
		tU4	LW	3C54	LW	3C6F	28	to Upper Eqp #04	
		tU5	LW	3C70	LW	3C8B	28	to Upper Eqp #05	
	to Lower Eqp	tL1	LW	3C8C	LW	3DF3	360	to Lower Eqp #01	
		tL2	LW	3DF4	LW	3F5B	360	to Lower Eqp #02	
		tL3	LW	3F5C	LW	40C3	360	to Lower Eqp #03	
		tL4	LW	40C4	LW	422B	360	to Lower Eqp #04	
		tL5	LW	422C	LW	4393	360	to Lower Eqp #05	
	Eq State	Own	LW	4394	LW	43CF	60	Preview (Own)	
		Relate	LW	43D0	LW	440B	60	Preview (Related)	
	Panel Summary		LW	440C	LW	44A1	150	Panel Summary (Total)	
	Reserved		LW	44A2	LW	4505	100	Reserved	
L4	**TOTAL**		**LW**	**3C00**	**LW**	**4505**	**2,310**	**L4 TOTAL**	
SDC	**Reserved**		**LW**	**4506**	**LW**	**4FFF**	**2,810**	**SDC Reserved**	
L5	to Upper Eqp	tU1	LW	5000	LW	501B	28	to Upper Eqp #01	
		tU2	LW	501C	LW	5037	28	to Upper Eqp #02	
		tU3	LW	5038	LW	5053	28	to Upper Eqp #03	
		tU4	LW	5054	LW	506F	28	to Upper Eqp #04	
		tU5	LW	5070	LW	508B	28	to Upper Eqp #05	
	to Lower Eqp	tL1	LW	508C	LW	51F3	360	to Lower Eqp #01	
		tL2	LW	51F4	LW	535B	360	to Lower Eqp #02	
		tL3	LW	535C	LW	54C3	360	to Lower Eqp #03	
		tL4	LW	54C4	LW	562B	360	to Lower Eqp #04	
		tL5	LW	562C	LW	5793	360	to Lower Eqp #05	
	Eq State	Own	LW	5794	LW	57CF	60	Preview (Own)	
		Relate	LW	57D0	LW	580B	60	Preview (Related)	
	Panel Summary		LW	580C	LW	58A1	150	Panel Summary (Total)	
	Reserved		LW	58A2	LW	5905	100	Reserved	
L5	**TOTAL**		**LW**	**5000**	**LW**	**5905**	**2,310**	**L5 TOTAL**	
SDC	**Reserved**		**LW**	**5906**	**LW**	**63FF**	**2,810**	**SDC Reserved**	
L6	to Upper Eqp	tU1	LW	6400	LW	641B	28	to Upper Eqp #01	
		tU2	LW	641C	LW	6437	28	to Upper Eqp #02	
		tU3	LW	6438	LW	6453	28	to Upper Eqp #03	
		tU4	LW	6454	LW	646F	28	to Upper Eqp #04	
		tU5	LW	6470	LW	648B	28	to Upper Eqp #05	
	to Lower Eqp	tL1	LW	648C	LW	65F3	360	to Lower Eqp #01	
		tL2	LW	65F4	LW	675B	360	to Lower Eqp #02	
		tL3	LW	675C	LW	68C3	360	to Lower Eqp #03	
		tL4	LW	68C4	LW	6A2B	360	to Lower Eqp #04	
		tL5	LW	6A2C	LW	6B93	360	to Lower Eqp #05	
	Eq State	Own	LW	6B94	LW	6BCF	60	Preview (Own)	
		Relate	LW	6BD0	LW	6C0B	60	Preview (Related)	
	Panel Summary		LW	6C0C	LW	6CA1	150	Panel Summary (Total)	
	Reserved		LW	6CA2	LW	6D05	100	Reserved	
L6	**TOTAL**		**LW**	**6400**	**LW**	**6D05**	**2,310**	**L6 TOTAL**	
SDC	**Reserved**		**LW**	**6D06**	**LW**	**77FF**	**2,810**	**SDC Reserved**	
L7	to Upper Eqp	tU1	LW	7800	LW	781B	28	to Upper Eqp #01	
		tU2	LW	781C	LW	7837	28	to Upper Eqp #02	
		tU3	LW	7838	LW	7853	28	to Upper Eqp #03	
		tU4	LW	7854	LW	786F	28	to Upper Eqp #04	

송지훈/jhsmd.song/Module자동화그룹(아산/천안단지)/1071158069/20161226154317
053801482741791

Local	SDCtion	Item	Address					Comment	Remarks
			Start		End		Lenth		
		tU5	LW	7870	LW	788B	28	to Upper Eqp #05	
	to Lower Eqp	tL1	LW	788C	LW	79F3	360	to Lower Eqp #01	
		tL2	LW	79F4	LW	7B5B	360	to Lower Eqp #02	
		tL3	LW	7B5C	LW	7CC3	360	to Lower Eqp #03	
		tL4	LW	7CC4	LW	7E2B	360	to Lower Eqp #04	
		tL5	LW	7E2C	LW	7F93	360	to Lower Eqp #05	
	Eq State	Own	LW	7F94	LW	7FCF	60	Preview (Own)	
		Relate	LW	7FD0	LW	800B	60	Preview (Related)	
	Panel Summary		LW	800C	LW	80A1	150	Panel Summary (Total)	
	Reserved		LW	80A2	LW	8105	100	Reserved	
L7	**TOTAL**		**LW**	**7800**	**LW**	**8105**	**2,310**	**L7 TOTAL**	
SDC	**Reserved**		**LW**	**8106**	**LW**	**8BFF**	**2,810**	**SDC Reserved**	
L8	to Upper Eqp	tU1	LW	8C00	LW	8C1B	28	to Upper Eqp #01	
		tU2	LW	8C1C	LW	8C37	28	to Upper Eqp #02	
		tU3	LW	8C38	LW	8C53	28	to Upper Eqp #03	
		tU4	LW	8C54	LW	8C6F	28	to Upper Eqp #04	
		tU5	LW	8C70	LW	8C8B	28	to Upper Eqp #05	
	to Lower Eqp	tL1	LW	8C8C	LW	8DF3	360	to Lower Eqp #01	
		tL2	LW	8DF4	LW	8F5B	360	to Lower Eqp #02	
		tL3	LW	8F5C	LW	90C3	360	to Lower Eqp #03	
		tL4	LW	90C4	LW	922B	360	to Lower Eqp #04	
		tL5	LW	922C	LW	9393	360	to Lower Eqp #05	
	Eq State	Own	LW	9394	LW	93CF	60	Preview (Own)	
		Relate	LW	93D0	LW	940B	60	Preview (Related)	
	Panel Summary		LW	940C	LW	94A1	150	Panel Summary (Total)	
	Reserved		LW	94A2	LW	9505	100	Reserved	
L8	**TOTAL**		**LW**	**8C00**	**LW**	**9505**	**2,310**	**L8 TOTAL**	
SDC	**Reserved**		**LW**	**9506**	**LW**	**9FFF**	**2,810**	**SDC Reserved**	
L9	to Upper Eqp	tU1	LW	A000	LW	A01B	28	to Upper Eqp #01	
		tU2	LW	A01C	LW	A037	28	to Upper Eqp #02	
		tU3	LW	A038	LW	A053	28	to Upper Eqp #03	
		tU4	LW	A054	LW	A06F	28	to Upper Eqp #04	
		tU5	LW	A070	LW	A08B	28	to Upper Eqp #05	
	to Lower Eqp	tL1	LW	A08C	LW	A1F3	360	to Lower Eqp #01	
		tL2	LW	A1F4	LW	A35B	360	to Lower Eqp #02	
		tL3	LW	A35C	LW	A4C3	360	to Lower Eqp #03	
		tL4	LW	A4C4	LW	A62B	360	to Lower Eqp #04	
		tL5	LW	A62C	LW	A793	360	to Lower Eqp #05	
	Eq State	Own	LW	A794	LW	A7CF	60	Preview (Own)	
		Relate	LW	A7D0	LW	A80B	60	Preview (Related)	
	Panel Summary		LW	A80C	LW	A8A1	150	Panel Summary (Total)	
	Reserved		LW	A8A2	LW	A905	100	Reserved	
L9	**TOTAL**		**LW**	**A000**	**LW**	**A905**	**2,310**	**L9 TOTAL**	
SDC	**Reserved**		**LW**	**A906**	**LW**	**B3FF**	**2,810**	**SDC Reserved**	
L10	to Upper Eqp	tU1	LW	B400	LW	B41B	28	to Upper Eqp #01	
		tU2	LW	B41C	LW	B437	28	to Upper Eqp #02	
		tU3	LW	B438	LW	B453	28	to Upper Eqp #03	
		tU4	LW	B454	LW	B46F	28	to Upper Eqp #04	
		tU5	LW	B470	LW	B48B	28	to Upper Eqp #05	
		tL1	LW	B48C	LW	B5F3	360	to Lower Eqp #01	

송지훈/jhsmd.song/Module자동화그룹(아산/천안단지)/1071158069/20161226154317
053801482741791

Local	SDCtion	Item	Address					Comment	Remarks
			Start		End		Lenth		
	to Lower Eqp	tL2	LW	B5F4	LW	B75B	360	to Lower Eqp #02	
		tL3	LW	B75C	LW	B8C3	360	to Lower Eqp #03	
		tL4	LW	B8C4	LW	BA2B	360	to Lower Eqp #04	
		tL5	LW	BA2C	LW	BB93	360	to Lower Eqp #05	
	Eq State	Own	LW	BB94	LW	BBCF	60	Preview (Own)	
		Relate	LW	BBD0	LW	BC0B	60	Preview (Related)	
	Panel Summary		LW	BC0C	LW	BCA1	150	Panel Summary (Total)	
	Reserved		LW	BCA2	LW	BD05	100	Reserved	
L10	**TOTAL**		**LW**	**B400**	**LW**	**BD05**	**2,310**	**L10 TOTAL**	
SDC	**Reserved**		**LW**	**BD06**	**LW**	**C7FF**	**2,810**	**SDC Reserved**	
L11	to Upper Eqp	tU1	LW	C800	LW	C81B	28	to Upper Eqp #01	
		tU2	LW	C81C	LW	C837	28	to Upper Eqp #02	
		tU3	LW	C838	LW	C853	28	to Upper Eqp #03	
		tU4	LW	C854	LW	C86F	28	to Upper Eqp #04	
		tU5	LW	C870	LW	C88B	28	to Upper Eqp #05	
	to Lower Eqp	tL1	LW	C88C	LW	C9F3	360	to Lower Eqp #01	
		tL2	LW	C9F4	LW	CB5B	360	to Lower Eqp #02	
		tL3	LW	CB5C	LW	CCC3	360	to Lower Eqp #03	
		tL4	LW	CCC4	LW	CE2B	360	to Lower Eqp #04	
		tL5	LW	CE2C	LW	CF93	360	to Lower Eqp #05	
	Eq State	Own	LW	CF94	LW	CFCF	60	Preview (Own)	
		Relate	LW	CFD0	LW	D00B	60	Preview (Related)	
	Panel Summary		LW	D00C	LW	D0A1	150	Panel Summary (Total)	
	Reserved		LW	D0A2	LW	D105	100	Reserved	
L11	**TOTAL**		**LW**	**C800**	**LW**	**D105**	**2,310**	**L11 TOTAL**	
SDC	**Reserved**		**LW**	**D106**	**LW**	**DBFF**	**2,810**	**SDC Reserved**	
L12	to Upper Eqp	tU1	LW	DC00	LW	DC1B	28	to Upper Eqp #01	
		tU2	LW	DC1C	LW	DC37	28	to Upper Eqp #02	
		tU3	LW	DC38	LW	DC53	28	to Upper Eqp #03	
		tU4	LW	DC54	LW	DC6F	28	to Upper Eqp #04	
		tU5	LW	DC70	LW	DC8B	28	to Upper Eqp #05	
	to Lower Eqp	tL1	LW	DC8C	LW	DDF3	360	to Lower Eqp #01	
		tL2	LW	DDF4	LW	DF5B	360	to Lower Eqp #02	
		tL3	LW	DF5C	LW	E0C3	360	to Lower Eqp #03	
		tL4	LW	E0C4	LW	E22B	360	to Lower Eqp #04	
		tL5	LW	E22C	LW	E393	360	to Lower Eqp #05	
	Eq State	Own	LW	E394	LW	E3CF	60	Preview (Own)	
		Relate	LW	E3D0	LW	E40B	60	Preview (Related)	
	Panel Summary		LW	E40C	LW	E4A1	150	Panel Summary (Total)	
	Reserved		LW	E4A2	LW	E505	100	Reserved	
L12	**TOTAL**		**LW**	**DC00**	**LW**	**E505**	**2,310**	**L12 TOTAL**	
SDC	**Reserved**		**LW**	**E506**	**LW**	**EFFF**	**2,810**	**SDC Reserved**	
L13	to Upper Eqp	tU1	LW	F000	LW	F01B	28	to Upper Eqp #01	
		tU2	LW	F01C	LW	F037	28	to Upper Eqp #02	
		tU3	LW	F038	LW	F053	28	to Upper Eqp #03	
		tU4	LW	F054	LW	F06F	28	to Upper Eqp #04	
		tU5	LW	F070	LW	F08B	28	to Upper Eqp #05	
	to Lower	tL1	LW	F08C	LW	F1F3	360	to Lower Eqp #01	
		tL2	LW	F1F4	LW	F35B	360	to Lower Eqp #02	
		tL3	LW	F35C	LW	F4C3	360	to Lower Eqp #03	

송지훈/jhsmd.song/Module자동화그룹(아산/천안단지)/1071158069/20161226154317
053801482741791

Local	SDCtion	Item	Address					Comment	Remarks
			Start		End		Lenth		
	Eqp	tL4	LW	F4C4	LW	F62B	360	to Lower Eqp #04	
		tL5	LW	F62C	LW	F793	360	to Lower Eqp #05	
	Eq State	Own	LW	F794	LW	F7CF	60	Preview (Own)	
		Relate	LW	F7D0	LW	F80B	60	Preview (Related)	
	Panel Summary		LW	F80C	LW	F8A1	150	Panel Summary (Total)	
	Reserved		LW	F8A2	LW	F905	100	Reserved	
L13	**TOTAL**		**LW**	**F000**	**LW**	**F905**	**2,310**	**L13 TOTAL**	
SDC	**Reserved**		**LW**	**F906**	**LW**	**103FF**	**2,810**	**SDC Reserved**	
L14	to Upper Eqp	tU1	LW	10400	LW	1041B	28	to Upper Eqp #01	
		tU2	LW	1041C	LW	10437	28	to Upper Eqp #02	
		tU3	LW	10438	LW	10453	28	to Upper Eqp #03	
		tU4	LW	10454	LW	1046F	28	to Upper Eqp #04	
		tU5	LW	10470	LW	1048B	28	to Upper Eqp #05	
	to Lower Eqp	tL1	LW	1048C	LW	105F3	360	to Lower Eqp #01	
		tL2	LW	105F4	LW	1075B	360	to Lower Eqp #02	
		tL3	LW	1075C	LW	108C3	360	to Lower Eqp #03	
		tL4	LW	108C4	LW	10A2B	360	to Lower Eqp #04	
		tL5	LW	10A2C	LW	10B93	360	to Lower Eqp #05	
	Eq State	Own	LW	10B94	LW	10BCF	60	Preview (Own)	
		Relate	LW	10BD0	LW	10C0B	60	Preview (Related)	
	Panel Summary		LW	10C0C	LW	10CA1	150	Panel Summary (Total)	
	Reserved		LW	10CA2	LW	10D05	100	Reserved	
L14	**TOTAL**		**LW**	**10400**	**LW**	**10D05**	**2,310**	**L14 TOTAL**	
SDC	**Reserved**		**LW**	**10D06**	**LW**	**117FF**	**2,810**	**SDC Reserved**	
L15	to Upper Eqp	tU1	LW	11800	LW	1181B	28	to Upper Eqp #01	
		tU2	LW	1181C	LW	11837	28	to Upper Eqp #02	
		tU3	LW	11838	LW	11853	28	to Upper Eqp #03	
		tU4	LW	11854	LW	1186F	28	to Upper Eqp #04	
		tU5	LW	11870	LW	1188B	28	to Upper Eqp #05	
	to Lower Eqp	tL1	LW	1188C	LW	119F3	360	to Lower Eqp #01	
		tL2	LW	119F4	LW	11B5B	360	to Lower Eqp #02	
		tL3	LW	11B5C	LW	11CC3	360	to Lower Eqp #03	
		tL4	LW	11CC4	LW	11E2B	360	to Lower Eqp #04	
		tL5	LW	11E2C	LW	11F93	360	to Lower Eqp #05	
	Eq State	Own	LW	11F94	LW	11FCF	60	Preview (Own)	
		Relate	LW	11FD0	LW	1200B	60	Preview (Related)	
	Panel Summary		LW	1200C	LW	120A1	150	Panel Summary (Total)	
	Reserved		LW	120A2	LW	12105	100	Reserved	
L15	**TOTAL**		**LW**	**11800**	**LW**	**12105**	**2,310**	**L15 TOTAL**	
SDC	**Reserved**		**LW**	**12106**	**LW**	**12BFF**	**2,810**	**SDC Reserved**	
L16	to Upper Eqp	tU1	LW	12C00	LW	12C1B	28	to Upper Eqp #01	
		tU2	LW	12C1C	LW	12C37	28	to Upper Eqp #02	
		tU3	LW	12C38	LW	12C53	28	to Upper Eqp #03	
		tU4	LW	12C54	LW	12C6F	28	to Upper Eqp #04	
		tU5	LW	12C70	LW	12C8B	28	to Upper Eqp #05	
	to Lower Eqp	tL1	LW	12C8C	LW	12DF3	360	to Lower Eqp #01	
		tL2	LW	12DF4	LW	12F5B	360	to Lower Eqp #02	
		tL3	LW	12F5C	LW	130C3	360	to Lower Eqp #03	
		tL4	LW	130C4	LW	1322B	360	to Lower Eqp #04	
		tL5	LW	1322C	LW	13393	360	to Lower Eqp #05	

송지훈/jhsmd.song/Module자동화그룹(아산/천안단지)/1071158069/20161226154317
053801482741791

Local	SDCtion	Item	Address Start		Address End		Lenth	Comment	Remarks
	Eq State	Own	LW	13394	LW	133CF	60	Preview (Own)	
		Relate	LW	133D0	LW	1340B	60	Preview (Related)	
	Panel Summary		LW	1340C	LW	134A1	150	Panel Summary (Total)	
	Reserved		LW	134A2	LW	13505	100	Reserved	
L16	**TOTAL**		**LW**	**12C00**	**LW**	**13505**	**2,310**	**L16 TOTAL**	
SDC	**Reserved**		**LW**	**13506**	**LW**	**13FFF**	**2,810**	**SDC Reserved**	
L17	to Upper Eqp	tU1	LW	14000	LW	1401B	28	to Upper Eqp #01	
		tU2	LW	1401C	LW	14037	28	to Upper Eqp #02	
		tU3	LW	14038	LW	14053	28	to Upper Eqp #03	
		tU4	LW	14054	LW	1406F	28	to Upper Eqp #04	
		tU5	LW	14070	LW	1408B	28	to Upper Eqp #05	
	to Lower Eqp	tL1	LW	1408C	LW	141F3	360	to Lower Eqp #01	
		tL2	LW	141F4	LW	1435B	360	to Lower Eqp #02	
		tL3	LW	1435C	LW	144C3	360	to Lower Eqp #03	
		tL4	LW	144C4	LW	1462B	360	to Lower Eqp #04	
		tL5	LW	1462C	LW	14793	360	to Lower Eqp #05	
	Eq State	Own	LW	14794	LW	147CF	60	Preview (Own)	
		Relate	LW	147D0	LW	1480B	60	Preview (Related)	
	Panel Summary		LW	1480C	LW	148A1	150	Panel Summary (Total)	
	Reserved		LW	148A2	LW	14905	100	Reserved	
L17	**TOTAL**		**LW**	**14000**	**LW**	**14905**	**2,310**	**L17 TOTAL**	
SDC	**Reserved**		**LW**	**14906**	**LW**	**153FF**	**2,810**	**SDC Reserved**	
L18	to Upper Eqp	tU1	LW	15400	LW	1541B	28	to Upper Eqp #01	
		tU2	LW	1541C	LW	15437	28	to Upper Eqp #02	
		tU3	LW	15438	LW	15453	28	to Upper Eqp #03	
		tU4	LW	15454	LW	1546F	28	to Upper Eqp #04	
		tU5	LW	15470	LW	1548B	28	to Upper Eqp #05	
	to Lower Eqp	tL1	LW	1548C	LW	155F3	360	to Lower Eqp #01	
		tL2	LW	155F4	LW	1575B	360	to Lower Eqp #02	
		tL3	LW	1575C	LW	158C3	360	to Lower Eqp #03	
		tL4	LW	158C4	LW	15A2B	360	to Lower Eqp #04	
		tL5	LW	15A2C	LW	15B93	360	to Lower Eqp #05	
	Eq State	Own	LW	15B94	LW	15BCF	60	Preview (Own)	
		Relate	LW	15BD0	LW	15C0B	60	Preview (Related)	
	Panel Summary		LW	15C0C	LW	15CA1	150	Panel Summary (Total)	
	Reserved		LW	15CA2	LW	15D05	100	Reserved	
L18	**TOTAL**		**LW**	**15400**	**LW**	**15D05**	**2,310**	**L18 TOTAL**	
SDC	**Reserved**		**LW**	**15D06**	**LW**	**167FF**	**2,810**	**SDC Reserved**	
L19	to Upper Eqp	tU1	LW	16800	LW	1681B	28	to Upper Eqp #01	
		tU2	LW	1681C	LW	16837	28	to Upper Eqp #02	
		tU3	LW	16838	LW	16853	28	to Upper Eqp #03	
		tU4	LW	16854	LW	1686F	28	to Upper Eqp #04	
		tU5	LW	16870	LW	1688B	28	to Upper Eqp #05	
	to Lower Eqp	tL1	LW	1688C	LW	169F3	360	to Lower Eqp #01	
		tL2	LW	169F4	LW	16B5B	360	to Lower Eqp #02	
		tL3	LW	16B5C	LW	16CC3	360	to Lower Eqp #03	
		tL4	LW	16CC4	LW	16E2B	360	to Lower Eqp #04	
		tL5	LW	16E2C	LW	16F93	360	to Lower Eqp #05	
	Eq State	Own	LW	16F94	LW	16FCF	60	Preview (Own)	
		Relate	LW	16FD0	LW	1700B	60	Preview (Related)	

송지훈/jhsmd.song/Module자동화그룹(아산/천안단지)/1071158069/20161226154317
053801482741791

Local	SDCtion	Item	Address						Comment	Remarks
			Start		End		Lenth			
	Panel Summary		LW	1700C	LW	170A1	150		Panel Summary (Total)	
	Reserved		LW	170A2	LW	17105	100		Reserved	
L19	TOTAL		LW	16800	LW	17105	2,310		L19 TOTAL	
SDC	Reserved		LW	17106	LW	17BFF	2,810		SDC Reserved	
L20	to Upper Eqp	tU1	LW	17C00	LW	17C1B	28		to Upper Eqp #01	
		tU2	LW	17C1C	LW	17C37	28		to Upper Eqp #02	
		tU3	LW	17C38	LW	17C53	28		to Upper Eqp #03	
		tU4	LW	17C54	LW	17C6F	28		to Upper Eqp #04	
		tU5	LW	17C70	LW	17C8B	28		to Upper Eqp #05	
	to Lower Eqp	tL1	LW	17C8C	LW	17DF3	360		to Lower Eqp #01	
		tL2	LW	17DF4	LW	17F5B	360		to Lower Eqp #02	
		tL3	LW	17F5C	LW	180C3	360		to Lower Eqp #03	
		tL4	LW	180C4	LW	1822B	360		to Lower Eqp #04	
		tL5	LW	1822C	LW	18393	360		to Lower Eqp #05	
	Eq State	Own	LW	18394	LW	183CF	60		Preview (Own)	
		Relate	LW	183D0	LW	1840B	60		Preview (Related)	
	Panel Summary		LW	1840C	LW	184A1	150		Panel Summary (Total)	
	Reserved		LW	184A2	LW	18505	100		Reserved	
L20	TOTAL		LW	17C00	LW	18505	2,310		L20 TOTAL	
SDC	Reserved		LW	18506	LW	18FFF	2,810		SDC Reserved	
SDC Total Reserved			LW	19000	LW	1FFFF	28,672		SDC Total Reserved	
TOTAL			LW	0000	LW	1FFFF	131,072		TOTAL	

송지훈/jhsmd.song/Module자동화그룹(아산/천안단지)/1071158069/20161226154317
053801482741791

Component Hand Shake Bits of "to Upper Equipment"						
Area	Item	Address			Comment	Remarks
		Start	End	L		
to Upper HS	Heartbeat	LB(n+ 0000	LB(n+ 0000	1	Status	
	Machine_Pause	LB(n+ 0001	LB(n+ 0001	1	Status	
	Machine_Abnormal	LB(n+ 0002	LB(n+ 0002	1	Status	
	Reserved_03	LB(n+ 0003	LB(n+ 0003	1		
	Rcv_Able	LB(n+ 0004	LB(n+ 0004	1		
	Rcv_Start	LB(n+ 0005	LB(n+ 0005	1		
	Rcv_Complete	LB(n+ 0006	LB(n+ 0006	1		
	Imm_Pause_Request	LB(n+ 0007	LB(n+ 0007	1		
	Return_Send_Start	LB(n+ 0008	LB(n+ 0008	1		
	Return_Send_Complete	LB(n+ 0009	LB(n+ 0009	1		
	Exchange_Flag	LB(n+ 000A	LB(n+ 000A	1		
	MultiCarry_Flag	LB(n+ 000B	LB(n+ 000B	1		
	Reserved_12	LB(n+ 000C	LB(n+ 000C	1		
	Reserved_13	LB(n+ 000D	LB(n+ 000D	1		
	Loading_Stop	LB(n+ 000E	LB(n+ 000E	1		
	Transfer_Stop	LB(n+ 000F	LB(n+ 000F	1		
	Pre_Action_1	LB(n+ 0010	LB(n+ 0010	1	Eq	
	Pre_Action_2	LB(n+ 0011	LB(n+ 0011	1	Eq	
	Mid_Action_1	LB(n+ 0012	LB(n+ 0012	1	Eq	
	Mid_Action_2	LB(n+ 0013	LB(n+ 0013	1	Eq	
	Post_Action_1	LB(n+ 0014	LB(n+ 0014	1	Eq	
	Reserved_21	LB(n+ 0015	LB(n+ 0015	1		
	Rcv_Refuse	LB(n+ 0016	LB(n+ 0016	1	Status	
	Reserved_23	LB(n+ 0017	LB(n+ 0017	1	Status	
	Reserved_24	LB(n+ 0018	LB(n+ 0018	1		
	Reserved_25	LB(n+ 0019	LB(n+ 0019	1		
	HS_Resume_Reqest	LB(n+ 001A	LB(n+ 001A	1	Recovery	
	HS_Resume_Reply_Ack	LB(n+ 001B	LB(n+ 001B	1	Recovery	
	HS_Resume_Reply_Nak	LB(n+ 001C	LB(n+ 001C	1	Recovery	
	Reserved_29	LB(n+ 001D	LB(n+ 001D	1		
	HS_Initial	LB(n+ 001E	LB(n+ 001E	1	Recovery	
	HS_Error	LB(n+ 001F	LB(n+ 001F	1	Recovery	
Contact State	Contact Point State	LB(n+ 0020	LB(n+ 003F	32		
	Reserved	LB(n+ 0040	LB(n+ 005F	32		
	Reserved	LB(n+ 0060	LB(n+ 007F	32		
				128	Bits	

송지훈/jhsmd.song/Module자동화그룹(아산/천안단지)/1071158069/20161226154317
053801482741791

Component Hand Shake Bits of "to Lower Equipment"						
Area	Item	Address			Comment	Remarks
		Start	End	L		
to Lower HS	Heartbeat	LB(n+ 0000	LB(n+ 0000	1	Status	
	Machine_Pause	LB(n+ 0001	LB(n+ 0001	1	Status	
	Machine_Abnormal	LB(n+ 0002	LB(n+ 0002	1	Status	
	Reserved_03	LB(n+ 0003	LB(n+ 0003	1		
	Send_Able	LB(n+ 0004	LB(n+ 0004	1		
	Send_Start	LB(n+ 0005	LB(n+ 0005	1		
	Send_Complete	LB(n+ 0006	LB(n+ 0006	1		
	Imm_Pause_Request	LB(n+ 0007	LB(n+ 0007	1		
	Return_Rcv_Start	LB(n+ 0008	LB(n+ 0008	1		
	Return_Rcv_Complete	LB(n+ 0009	LB(n+ 0009	1		
	Exchange_Flag	LB(n+ 000A	LB(n+ 000A	1		
	MultiCarry_Flag	LB(n+ 000B	LB(n+ 000B	1		
	Reserved_12	LB(n+ 000C	LB(n+ 000C	1		
	Reserved_13	LB(n+ 000D	LB(n+ 000D	1		
	Reserved_14	LB(n+ 000E	LB(n+ 000E	1		
	Reserved_15	LB(n+ 000F	LB(n+ 000F	1		
	Pre_Action_1	LB(n+ 0010	LB(n+ 0010	1	Eq	
	Pre_Action_2	LB(n+ 0011	LB(n+ 0011	1	Eq	
	Mid_Action_1	LB(n+ 0012	LB(n+ 0012	1	Eq	
	Mid_Action_2	LB(n+ 0013	LB(n+ 0013	1	Eq	
	Post_Action_1	LB(n+ 0014	LB(n+ 0014	1	Eq	
	Reserved_21	LB(n+ 0015	LB(n+ 0015	1		
	Reserved_22	LB(n+ 0016	LB(n+ 0016	1		
	Reserved_23	LB(n+ 0017	LB(n+ 0017	1		
	Reserved_24	LB(n+ 0018	LB(n+ 0018	1		
	Reserved_25	LB(n+ 0019	LB(n+ 0019	1		
	HS_Resume_Request	LB(n+ 001A	LB(n+ 001A	1	Recovery	
	HS_Resume_Reply_Ack	LB(n+ 001B	LB(n+ 001B	1	Recovery	
	HS_Resume_Reply_Nak	LB(n+ 001C	LB(n+ 001C	1	Recovery	
	Reserved_29	LB(n+ 001D	LB(n+ 001D	1		
	HS_Initial	LB(n+ 001E	LB(n+ 001E	1	Recovery	
	HS_Error	LB(n+ 001F	LB(n+ 001F	1	Recovery	
Contact State	ContactPointState	LB(n+ 0020	LB(n+ 003F	32		
	Reserved	LB(n+ 0040	LB(n+ 005F	32		
	Reserved	LB(n+ 0060	LB(n+ 007F	32		
TOTAL				128	Bits	

송지훈/jhsmd.song/Module자동화그룹(아산/천안단지)/1071158069/20161226154317
053801482741791

Contact Point State						
Area	Item	Address			Comment	Remarks
		Start	End	L		
Contact Point State	Abnormal	LB(n+ 0000	LB(n+ 0000	1	Off : Abnormal	
	TypeofArm	LB(n+ 0001	LB(n+ 0001	1	On : Robot, Off : Other	
	TypeofStage	LB(n+ 0002	LB(n+ 0002	1	On : Stage, Off : Other	
	Manual_Operation	LB(n+ 0003	LB(n+ 0003	1	On : Manual mode	
	Safety	LB(n+ 0004	LB(n+ 0004	1	Off : Danger	
	Empty (With-out Panel)	LB(n+ 0005	LB(n+ 0005	1	On : Empty	
	Wait (Panel is waiting next Cycle)	LB(n+ 0006	LB(n+ 0006	1	On : Idle	
	Busy (Panel is Moving)	LB(n+ 0007	LB(n+ 0007	1	On : Busy	
	Pause (Panel paused among Cycle)	LB(n+ 0008	LB(n+ 0008	1	On : Pause	
	Reserved_09	LB(n+ 0009	LB(n+ 0009	1		
	Arm_1_Violate	LB(n+ 000A	LB(n+ 000A	1	On : Violate	
	Arm_2_Violate	LB(n+ 000B	LB(n+ 000B	1	On : Violate	
	Arm_1_Fold_Complete	LB(n+ 000C	LB(n+ 000C	1	On : Folded	
	Arm_2_Fold_Complete	LB(n+ 000D	LB(n+ 000D	1	On : Folded	
	Arm_1_Panel_Detect	LB(n+ 000E	LB(n+ 000E	1	On : Panel Detect	
	Arm_2_Panel_Detect	LB(n+ 000F	LB(n+ 000F	1	On : Panel Detect	
	Robot_Direction	LB(n+ 0010	LB(n+ 0010	1	On : See Opponent	
	Reserved_17	LB(n+ 0011	LB(n+ 0011	1		
	Reserved_18	LB(n+ 0012	LB(n+ 0012	1		
	Reserved_19	LB(n+ 0013	LB(n+ 0013	1		
	Pin_Up (Lift Up)	LB(n+ 0014	LB(n+ 0014	1	On : Up	
	Pin_Down (Lift Down)	LB(n+ 0015	LB(n+ 0015	1	On : Down	
	Stopper_Up (Centering Close)	LB(n+ 0016	LB(n+ 0016	1	On : Up or Close	
	Stopper_Down (Centering Open)	LB(n+ 0017	LB(n+ 0017	1	On : Down or Open	
	Door_Open	LB(n+ 0018	LB(n+ 0018	1	On : Open	
	Door_Close	LB(n+ 0019	LB(n+ 0019	1	On : Close	
	Panel_Detect (OP, Transpire, Entry)	LB(n+ 001A	LB(n+ 001A	1	On : Panel Detect	
	Body_Moving (Tilting, Up/down, etc)	LB(n+ 001B	LB(n+ 001B	1	On : Moving	
	Body_OP	LB(n+ 001C	LB(n+ 001C	1	On : Original Position	
	Reserved_29	LB(n+ 001D	LB(n+ 001D	1		
	Reserved_30	LB(n+ 001E	LB(n+ 001E	1		
	Reserved_31	LB(n+ 001F	LB(n+ 001F	1		
TOTAL				32	Bits	

송지훈/jhsmd.song/Module자동화그룹(아산/천안단지)/1071158069/20161226154317
053801482741791

to Upper Equipment						
Area	Item	Address			Comment	Remarks
		Start	End	Lenth		
Request Cell Type	Reading Cell ID	LW(n+ 0000	LW(n+ 0013	20		
	Reading Cell ID Type	LW(n+ 0014	LW(n+ 0014	1		
	Cell Type	LW(n+ 0015	LW(n+ 0015	1		
	Lot Process Type	LW(n+ 0016	LW(n+ 0016	1		
	Reserved	LW(n+ 0017	LW(n+ 0017	1		
	Sub TOTAL			24	Words	
Contact Point Staet	Reserved	LW(n+ 0018	LW(n+ 0019	2		
	Reserved	LW(n+ 001A	LW(n+ 001B	2		
	Sub TOTAL			4	Words	
	TOTAL			28	Words	

송지훈/jhsmd.song/Module자동화그룹(아산/천안단지)/1071158069/20161226154317
053801482741791

to Lower Equipment						
Area	Item	Address			Comment	Remarks
		Start	End	Lenth		
Cell Data	H_CellID	LW(n+ 0000	LW(n+ 0013	20		
	E_CellID	LW(n+ 0014	LW(n+ 0027	20		
	LOTID	LW(n+ 0028	LW(n+ 003B	20		
	BATCHID	LW(n+ 003C	LW(n+ 0043	8		
	JOBID	LW(n+ 0044	LW(n+ 004B	8		
	PORTID	LW(n+ 004C	LW(n+ 004D	2		
	SLOTID	LW(n+ 004E	LW(n+ 004E	1		
	PRODUCT_TYPE	LW(n+ 004F	LW(n+ 0050	2		
	PRODUCT_KIND	LW(n+ 0051	LW(n+ 0052	2		
	PRODUCTID	LW(n+ 0053	LW(n+ 0066	20		
	RUNSPECID	LW(n+ 0067	LW(n+ 006E	8		
	LAYERID	LW(n+ 006F	LW(n+ 0072	4		
	STEPID	LW(n+ 0073	LW(n+ 0076	4		
	PPID	LW(n+ 0077	LW(n+ 008A	20		
	FLOWID	LW(n+ 008B	LW(n+ 0094	10		
	Cell_SIZE	LW(n+ 0095	LW(n+ 0096	2		
	Cell_THICKNESS	LW(n+ 0097	LW(n+ 0097	1		
	Cell_STATE	LW(n+ 0098	LW(n+ 0098	1		
	Cell_ORDER	LW(n+ 0099	LW(n+ 009A	2		
	COMMENT	LW(n+ 009B	LW(n+ 00A2	8		
	USE_COUNT	LW(n+ 00A3	LW(n+ 00A4	2		
	JUDGEMENT	LW(n+ 00A5	LW(n+ 00A6	2		
	REASON_CODE	LW(n+ 00A7	LW(n+ 00A8	2		
	INS_FLAG	LW(n+ 00A9	LW(n+ 00A9	1		
	ENC_FLAG	LW(n+ 00AA	LW(n+ 00AA	1		
	PRERUN_FLAG	LW(n+ 00AB	LW(n+ 00AB	1		
	TURN_DIR	LW(n+ 00AC	LW(n+ 00AC	1		
	FLIP_STATE	LW(n+ 00AD	LW(n+ 00AD	1		
	WORK_STATE	LW(n+ 00AE	LW(n+ 00AF	2		
	MULTI_USE	LW(n+ 00B0	LW(n+ 00B7	8		
	PAIR_CellID	LW(n+ 00B8	LW(n+ 00CB	20		
	PAIR_PPID	LW(n+ 00CC	LW(n+ 00D5	10		
	CELL_COUNT	LW(n+ 00D6	LW(n+ 00D6	1		
	MATERIALID	LW(n+ 00D7	LW(n+ 00F4	30		
	UNIQUEID	LW(n+ 00D7	LW(n+ 013A	100		
	Reserved	LW(n+ 00F5	LW(n+ 00FF	11		
	Sub TOTAL			356	Words	
Contact State	Reserved	LW(n+ 0100	LW(n+ 0101	2		
	Reserved	LW(n+ 0102	LW(n+ 0103	2		
	Sub TOTAL			4	Words	
	TOTAL			360	Words	

송지훈/jhsmd.song/Module자동화그룹(아산/천안단지)/1071158069/20161226154317
053801482741791

Pre View of "Equipment State"						
Area	Item	Address			Comment	Remarks
		Start	End	Lenth		
Equipment State	Eq State	LW(n+ 0000	LW(n+ 0000	1	Eq State	
	Proc State	LW(n+ 0001	LW(n+ 0001	1	Process State	
	PPID	LW(n+ 0002	LW(n+ 0015	20	Current Setted PPID	
	Cell Size	LW(n+ 0016	LW(n+ 0017	2	Current Setted Cell Size	
	Cell Thickness	LW(n+ 0018	LW(n+ 0018	1	Current Setted Cell Thickness	
	Tact(Set)	LW(n+ 0019	LW(n+ 0019	1	Setted TACT	
	Tact(Current)	LW(n+ 001A	LW(n+ 001A	1	Operated TACT	
	RCDG	LW(n+ 001B	LW(n+ 001B	1	Request Count of Dummy Cell	
	EQ-Mode	LW(n+ 001C	LW(n+ 001C	1	Equipment Opeartion Mode	
	ERC-Mode	LW(n+ 001D	LW(n+ 001D	1	quipment Recipe Change Mode	
	GMC-Mode	LW(n+ 001E	LW(n+ 001E	1	Cell Mechanical Change Mode	
	M1-Type	LW(n+ 001F	LW(n+ 0024	6	Material #1 Type	
	M1-Remain Coun	LW(n+ 0025	LW(n+ 0025	1	Material #1 Remain	
	M2-Type	LW(n+ 0026	LW(n+ 002B	6	Material #2 Type	
	M2-Remain Coun	LW(n+ 002C	LW(n+ 002C	1	Material #2 Remain	
	M3-Type	LW(n+ 002D	LW(n+ 0032	6	Material #3 Type	
	M3-Remain Coun	LW(n+ 0033	LW(n+ 0033	1	Material #3 Remain	
	Reserved	LW(n+ 0033	LW(n+ 003A	8		
TOTAL				60	Words	

송지훈/jhsmd.song/Module자동화그룹(아산/천안단지)/1071158069/20161226154317

053801482741791

Pre View of "Cell Summary"						
Area	Item	Address			Comment	Remarks
		Start	End	Lenth		
Cell Summary	Total Cell Count	LW(n+ 0000	LW(n+ 0000	1		
	TPS_Cell Count	LW(n+ 0001	LW(n+ 0001	1		
	EVEN_Cell Count	LW(n+ 0002	LW(n+ 0002	1		
	PMDT Cell Count	LW(n+ 0003	LW(n+ 0003	1		
	IDE Cell Count	LW(n+ 0004	LW(n+ 0004	1		
	Busy Cell Count	LW(n+ 0005	LW(n+ 0005	1		
	Finish Cell Count	LW(n+ 0006	LW(n+ 0006	1		
	BF Cell Count	LW(n+ 0007	LW(n+ 0007	1		
	RUNSPECID #1	LW(n+ 0008	LW(n+ 000F	8		
	ProductID #1	LW(n+ 0010	LW(n+ 0017	8		
	BatchID #1	LW(n+ 0018	LW(n+ 001F	8		
	StepID #1	LW(n+ 0020	LW(n+ 0023	4		
	Cell Count#1	LW(n+ 0024	LW(n+ 0024	1		
	RUNSPECID #2	LW(n+ 0025	LW(n+ 002C	8		
	ProductID #2	LW(n+ 002D	LW(n+ 0034	8		
	BatchID #2	LW(n+ 0035	LW(n+ 003C	8		
	StepID #2	LW(n+ 003D	LW(n+ 0040	4		
	Cell Count#2	LW(n+ 0041	LW(n+ 0041	1		
	RUNSPECID #3	LW(n+ 0042	LW(n+ 0049	8		
	ProductID #3	LW(n+ 004A	LW(n+ 0051	8		
	BatchID #3	LW(n+ 0052	LW(n+ 0059	8		
	StepID #3	LW(n+ 005A	LW(n+ 005D	4		
	Cell Count#3	LW(n+ 005E	LW(n+ 005E	1		
	Reserved	**LW(n+ 005F**	**LW(n+ 005F**	**1**		
	DBR_RECIPE#1	LW(n+ 0060	LW(n+ 0061	2		
	Cell Count#1	LW(n+ 0062	LW(n+ 0062	1		
	Reserved	**LW(n+ 0063**	**LW(n+ 0063**	**1**		
	DBR_RECIPE#2	LW(n+ 0064	LW(n+ 0065	2		
	Cell Count#2	LW(n+ 0066	LW(n+ 0066	1		
	Reserved	**LW(n+ 0067**	**LW(n+ 0067**	**1**		
	DBR_RECIPE#3	LW(n+ 0068	LW(n+ 0069	2		
	Cell Count#3	LW(n+ 006A	LW(n+ 006A	1		
	Reserved	**LW(n+ 006B**	**LW(n+ 0095**	**43**		
TOTAL				**150**	**Words**	

송지훈/jhsmd.song/Module자동화그룹(아산/천안단지)/1071158069/20161226154317
053801482741791

Cell Data's Bits Signal				
Area	Item	Address	Comment	Remarks
Cell Data Bits Signal	JOB_START	LB n.0		
	JOB_END	LB n.1		
	Reserved 01	LB n.2		
	Reserved 02	LB n.3		
	Reserved 03	LB n.4		
	Reserved 04	LB n.5		
	Reserved 05	LB n.6		
	Reserved 06	LB n.7		
	Reserved 07	LB n.8		
	Reserved 08	LB n.9		
	Reserved 09	LB n.A		
	Reserved 10	LB n.B		
	Reserved 11	LB n.C		
	Reserved 12	LB n.D		
	Reserved 13	LB n.E		
	Reserved 14	LB n.F		
TOTAL		16	Bits	

송지훈/jhsmd.song/Module자동화그룹(아산/천안단지)/1071158069/20161226154317
053801482741791

Eqp Status's Bits Signal				
Area	Item	Address	Comment	Remarks
Eqp Status's Bits Signal	Avail_Up	LB n.0		
	Avail_Down	LB n.1		
	Interlock_On	LB n.2		
	Interlock_Off	LB n.3		
	Reserved_05	LB n.4		
	Reserved_06	LB n.5		
	Reserved_07	LB n.6		
	Reserved_08	LB n.7		
	Move_Run	LB n.8		
	Move_Pause	LB n.9		
	Run_Run	LB n.A		
	Run_Idle	LB n.B		
	Reserved_14	LB n.C		
	Reserved_14	LB n.D		
	Reserved_14	LB n.E		
	Reserved_14	LB n.F		
	Reserved_16	LB (n+1).0		
	Reserved_17	LB (n+1).1		
	Reserved_18	LB (n+1).2		
	Reserved_19	LB (n+1).3		
	Reserved_20	LB (n+1).4		
	Reserved_21	LB (n+1).5		
	Reserved_22	LB (n+1).6		
	Reserved_23	LB (n+1).7		
	Reserved_24	LB (n+1).8		
	Reserved_25	LB (n+1).9		
	Reserved_26	LB (n+1).A		
	Reserved_27	LB (n+1).B		
	Reserved_28	LB (n+1).C		
	Reserved_29	LB (n+1).D		
	Reserved_30	LB (n+1).E		
	Reserved_31	LB (n+1).F		
TOTAL		32	Bits	

송지훈/jhsmd.song/Module자동화그룹(아산/천안단지)/1071158069/20161226154317
053801482741791